LuxiBright® PERFORMANCE

LIGHTING UP THE TRACK

TO DOMINATE THE RACE

To find out more about this product, visit our website:

www.less-sa.com

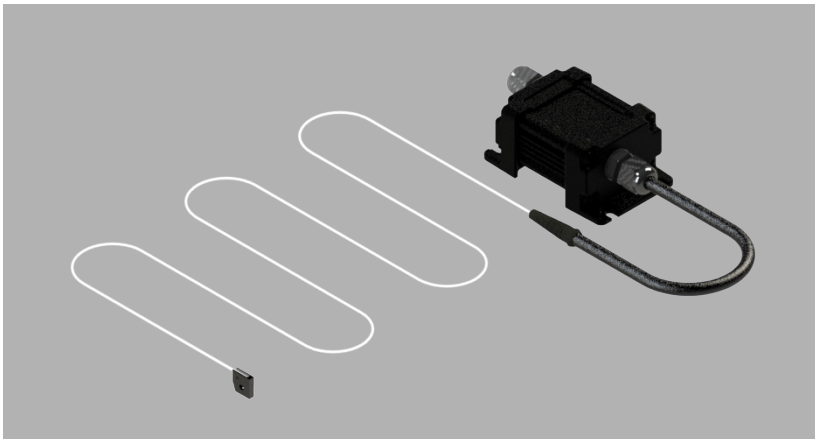

BENEFITS

LIGHT WEIGHT
Reduced weight for improved integration and racing efficiency

PERFORMANCE
Enhanced aerodynamics and speed, without sacrificing visibility

CUSTOMIZATION
Tailored lenght, color & intensity to fit every race equipment

With LuxiBright® Performance, we are pushing back the boundaries of automotive competition lighting. Developed in collaboration with BMW Motorsport, our technology offers extremely fine, strikingly intense light. More than just lighting, it's a distinctive light signature that embodies performance, elegance and precision. Thanks to our active fibre optic system, we can combine aesthetics and functionality in an ultra-compact format that's perfectly suited to the demands of motorsport.

Designed for both racing and design, LuxiBright® Performance offers unique design flexibility: it integrates easily into complex shapes, with fewer components, for a lighter, more durable structure. Less material, less weight, more freedom to create.

Discover how BMW Motorsport and their drivers leverage this technology on the racetrack—read the full case study and testimonial by scanning the QR code at the top of the page.

ONE TECHNOLOGY, ONE COMPLETE JOURNEY

This document is the property of L.E.S.S. SA and may not be copied without prior written permission. The statements in this document are believed to be reliable and accurate. However, no liability is accepted for their correctness, up-to-dateness or completeness. L.E.S.S. SA reserves the right to modify the design and technical characteristics of the products at any time and without prior notice.

LuxiBright® PERFORMANCE

LIGHTING UP THE TRACK

TO DOMINATE THE RACE

TECHNICAL SHEET

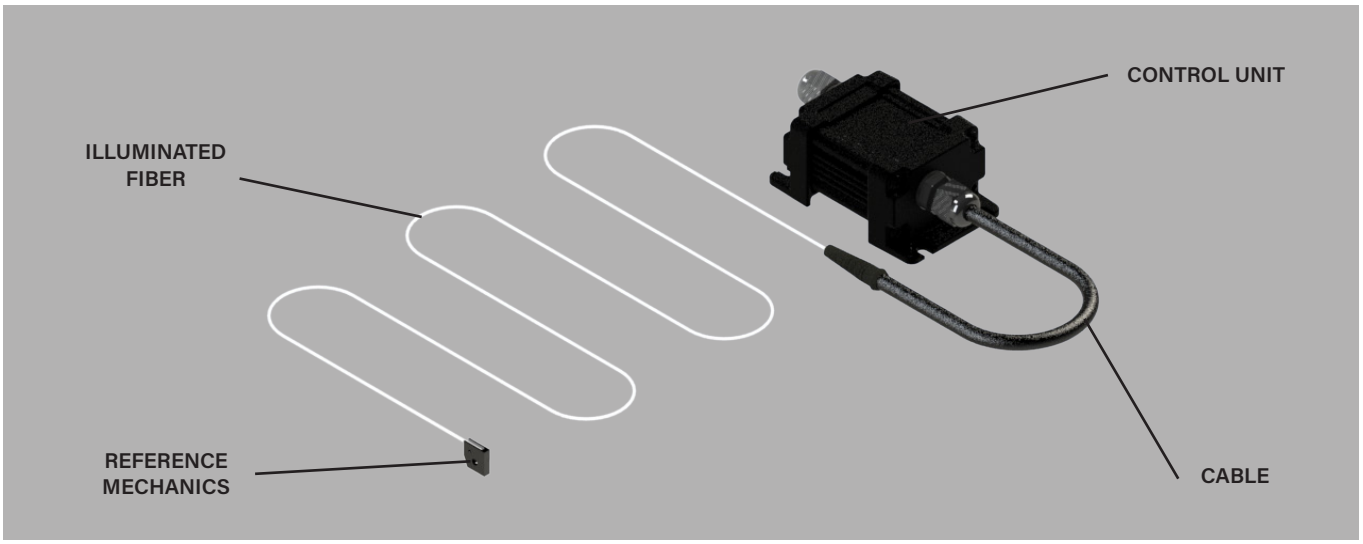

NAME	LuxiBright® PERFORMANCE
Application	Motorsport, Racing & Low Volume Cars
Technology	LuxiBright®
Driving El.	Integrated
Safety El.	Integrated
Thermal Int.	On Demand (passive)
IP Rating	IP 67
Fiber Thickness	From 1.5mm to 1.9mm
Operating Temperature	-40°C to 85°C
Light Intensity	On Demand (up to 1000 cd)
Lighting Angle	On Demand (15°-80° FWHM)
Lighting Lenght	On Demand (from 200mm to 2300mm)
Buffer Lenght	On (typ. 50mm to 1000mm
White Color	5400°K or 6400°K
ECE/SAE Colorrs	Amber (592 +/- 2nm), Super Red (628 +/- 2nm), Turquoise (504 +/- 2nm)
Custom Color	On Demand
MOQ	> 10

www.less-sa.com

LESS BE BRILLIANT

SWISS MADE

RISK CLASS 0
EN 62471: 2006

EYE-SAFE
CLASS 1 LASER PRODUCT
ICE 60825-1 2014-05

RoHS2 COMPLIANT

This document is the property of L.E.S.S. SA and may not be copied without prior written permission. The statements in this document are believed to be reliable and accurate. However, no liability is accepted for their correctness, up-to-dateness or completeness. L.E.S.S. SA reserves the right to modify the design and technical characteristics of the products at any time and without prior notice.