The next generation of machine vision lighting, powered by LuxiBright®

MACHINE VISION RING LIGHTS DATASHEET

www.less-sa.com

LESS BE BRILLIANT

This information is confidential and is not to be copied or forwarded to any 3rd party without our prior written consent.

TABLE OF CONTENTS

Product Application & Key Features 3

LuxiRing Mini (40mm) - General Mechanical Specifications 4

LuxiRing (76mm) - General Mechanical Specifications 5

LuxiRing (160mm) - General Mechanical Specifications 6

LuxiRing Maxi (420mm) - General Mechanical Specifications 7

ALL LuxiRing - 2D Drawing 8-9

Controller - 2D Drawing 10

Operating Mode 10-11

Cabling 12

Ordering Informations 12

Product Application

Machine Vision Lighting with LuxiBright® Technology

Leveraging our innovative LuxiBright lighting technology, which delivers uniform and directional illumination, we have developed a complete range of ring lights covering a wide spectrum of sizes. The range extends from the LuxiRing Mini, with a 40 mm diameter, up to the LuxiRing Maxi, reaching 400 mm in diameter. Leveraging LuxiBright technology, the 40 mm and 76 mm ring lights deliver unmatched brightness and uniformity for such compact formats, setting a new benchmark on the market.

Our product portfolio was developed to provide maximum flexibility and address all lighting requirements for machine vision applications. Our Machine Vision Lighting range is particularly optimized for semiconductor inspection, while remaining perfectly suited for all other industrial vision applications.

When combined with a camera and optics, our lighting solution delivers sharper, more precise, and higher-contrast images, improving inspection reliability, defect detection, and measurement repeatability.

Key Features

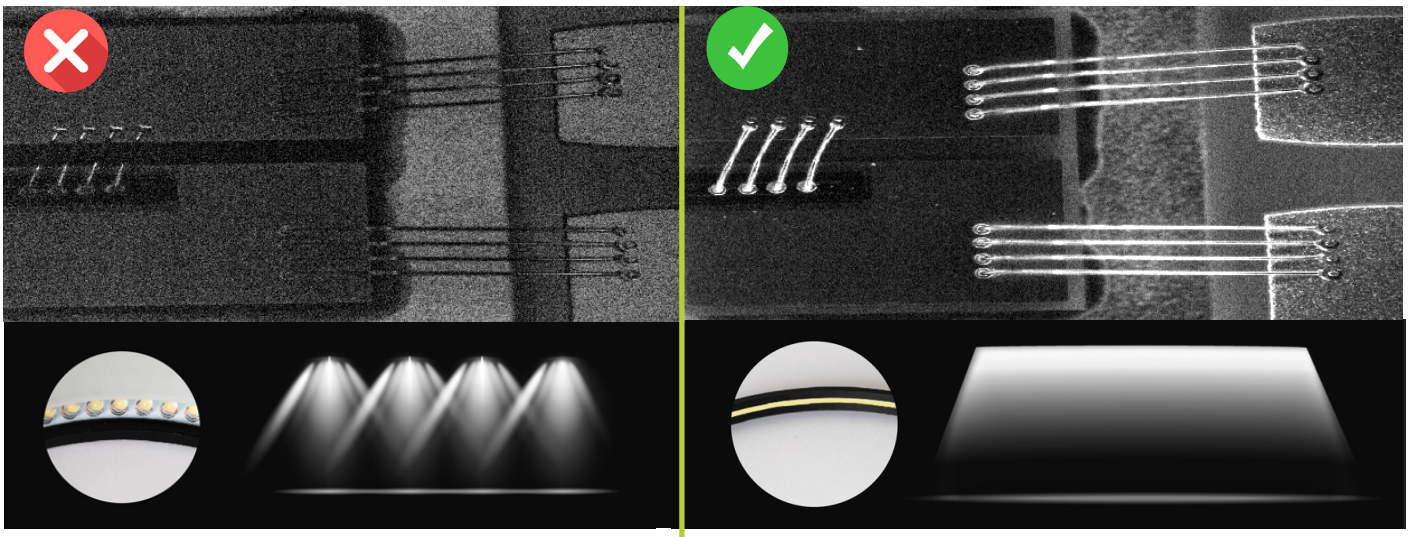

LED

LuxiBright®

Bulky Design

Diffuser Required

4X Thinner

5X Lighter

This document is property of L.E.S.S. SA and may not be copied without our prior written consent. All statements herein are believed to be reliable and accurate. However, no responsibility is assumed for any inaccuracies or omissions. L.E.S.S. SA reserves the right to make changes in the specifications at any time without prior notice.

LuxiRing Mini Ø40mm

General Mechanical Specifications

MECHANICAL SPECIFICATIONS

Variant	Product Reference	Hole Position*	Interface	Frame Material	Weight
40	LRHA-40-WH	3 x Ø 40 mm	M3 holes	Anodized Aluminium	≤ 130g
Controller interface**	DIN Rail adaptor TS35				

*For more information, please refer to the drawing of this variant in our download section or in our product page.
**Machine vision controller specifications, please refer to the controller section below.

OPTICAL SPECIFICATIONS

Lightning technology	LuxiBright®
Color	White
Color temperature	5400°K ±250°K
Illumination modes	Continuous / Trigger / Strobe (selected via DIP switch)
Part reference	Illuminance at optimal working distance***
LR-40-WH	>70'000 lx at 30 mm

***Measurements at specified vertical distance from the center of the rings.

ELECTRICAL SPECIFICATIONS

Electrical interface**	24 VDC / GND / Trig In
Max. Power Consumption**	19W (Overdrive), 12W (Nominal)
Overdrive ratio**	x 2.5
Strobe reactivity**	<10µs

**Machine vision controller specifications.

ENVIRONNEMENTAL SPECIFICATIONS

Working temperature	0-40°C
IP rating	IP 30

This document is property of L.E.S.S. SA and may not be copied without our prior written consent. All statements herein are believed to be reliable and accurate. However, no responsibility is assumed for any inaccuracies or omissions. L.E.S.S. SA reserves the right to make changes in the specifications at any time without prior notice.

LuxiRing Ø76mm

General Mechanical Specifications

MECHANICAL SPECIFICATIONS

Variant	Product Reference	Hole Position*	Interface	Frame Material	Weight
76	LRLA-76-WH LRLA-76-WH	4 x Ø 76 mm	M4 holes	Anodized Aluminium	≤ 120g
Controller interface**	DIN Rail adaptor TS35				

*For more information, please refer to the drawing of this variant in our download section or in our product page.
**Machine vision controller specifications, please refer to the controller section below.

OPTICAL SPECIFICATIONS

Lightning technology	LuxiBright®
Color	White
Color temperature	5400°K ±250°K
Illumination modes	Continuous / Trigger / Strobe (selected via DIP switch)
Part reference	Illuminance at optimal working distance***
LRLA-76-WH	>50'000 lx at 15 mm
LRHA-76-WH	>50'000 lx at 30 mm

***Measurements at specified vertical distance from the center of the rings.

ELECTRICAL SPECIFICATIONS

Electrical interface**	24 VDC / GND / Trig In
Max. Power Consumption**	19W (Overdrive), 12W (Nominal)
Overdrive ratio**	x 2.5
Strobe reactivity**	<10µs

**Machine vision controller specifications.

ENVIRONNEMENTAL SPECIFICATIONS

Working temperature	0-40°C
IP rating	IP 30

This document is property of L.E.S.S. SA and may not be copied without our prior written consent. All statements herein are believed to be reliable and accurate. However, no responsibility is assumed for any inaccuracies or omissions. L.E.S.S. SA reserves the right to make changes in the specifications at any time without prior notice.

LuxiRing Ø160mm

General Mechanical Specifications

MECHANICAL SPECIFICATIONS

Variant	Product Reference	Hole Position*	Interface	Frame Material	Weight
160	LRLA-160-WH LRHA-160-WH	4 x Ø 160 mm	M4 holes	Anodized Aluminium	≤ 150g
Controller interface**	DIN Rail adaptor TS35				

*For more information, please refer to the drawing of this variant in our download section or in our product page.
**Machine vision controller specifications, please refer to the controller section below.

OPTICAL SPECIFICATIONS

Lightning technology	LuxiBright®
Color	White
Color temperature	5400°K ±250°K
Illumination modes	Continuous / Trigger / Strobe (selected via DIP switch)
Part reference	Illuminance at optimal working distance***
LRLA-160-WH	>10'000 lx at 35 mm
LRHA-160-WH	>10'000 lx at 60 mm

***Measurements at specified vertical distance from the center of the rings.

ELECTRICAL SPECIFICATIONS

Electrical interface**	24 VDC / GND / Trig In
Max. Power Consumption**	19W (Overdrive), 12W (Nominal)
Overdrive ratio**	x 2.5
Strobe reactivity**	<10µs

**Machine vision controller specifications.

ENVIRONNEMENTAL SPECIFICATIONS

Working temperature	0-40°C
IP rating	IP 30

This document is property of L.E.S.S. SA and may not be copied without our prior written consent. All statements herein are believed to be reliable and accurate. However, no responsibility is assumed for any inaccuracies or omissions. L.E.S.S. SA reserves the right to make changes in the specifications at any time without prior notice.

LuxiRing Maxi Ø420mm

General Mechanical Specifications

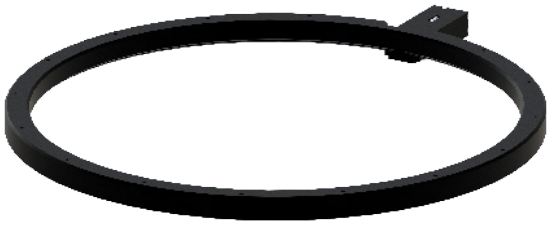

MECHANICAL SPECIFICATIONS

Variant	Product Reference	Hole Position*	Interface	Frame Material	Weight
420	LR-420	15 x Ø 420 mm	M4 holes	Anodized Aluminium	≤ 1.400g
Controller interface**	DIN Rail adaptor TS35				

*For more information, please refer to the drawing of this variant in our download section or in our product page.
**Machine vision controller specifications, please refer to the controller section below.

OPTICAL SPECIFICATIONS

Lightning technology	LuxiBright®
Color	White
Color temperature	5400°K ±250°K
Illumination modes	Continuous / Trigger / Strobe (selected via DIP switch)
Part reference	Illuminance at optimal working distance***
LR-420-WH	>2000 lx at 200 mm

***Measurements at specified vertical distance from the center of the rings.

ELECTRICAL SPECIFICATIONS

Electrical interface**	24 VDC / GND / Trig In
Max. Power Consumption**	12W (Nominal)
Overdrive ratio**	x 2.5
Strobe reactivity**	<10µs

**Machine vision controller specifications.

ENVIRONNEMENTAL SPECIFICATIONS

Working temperature	0-40°C
IP rating	IP 30

This document is property of L.E.S.S. SA and may not be copied without our prior written consent. All statements herein are believed to be reliable and accurate. However, no responsibility is assumed for any inaccuracies or omissions. L.E.S.S. SA reserves the right to make changes in the specifications at any time without prior notice.

1. LuxiRing Mini Ø40mm

2D Drawing

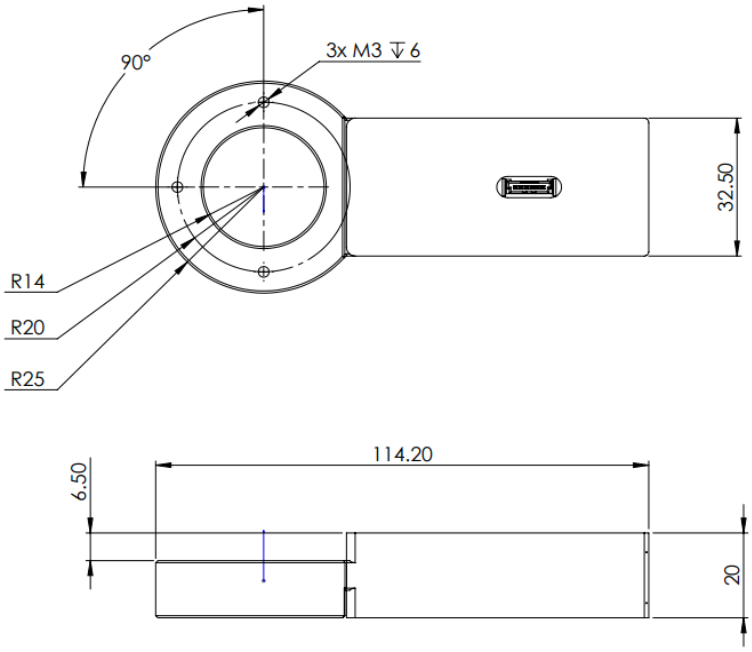

2. LuxiRing Ø76mm

2D Drawing

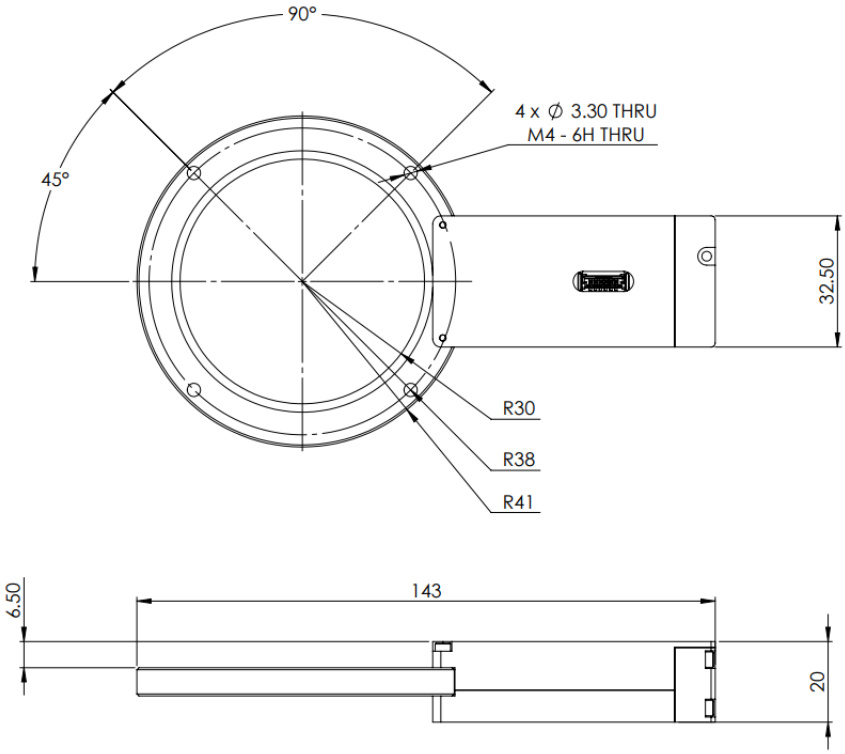

This document is property of L.E.S.S. SA and may not be copied without our prior written consent. All statements herein are believed to be reliable and accurate. However, no responsibility is assumed for any inaccuracies or omissions. L.E.S.S. SA reserves the right to make changes in the specifications at any time without prior notice.

3. LuxiRing Ø160mm

2D Drawing

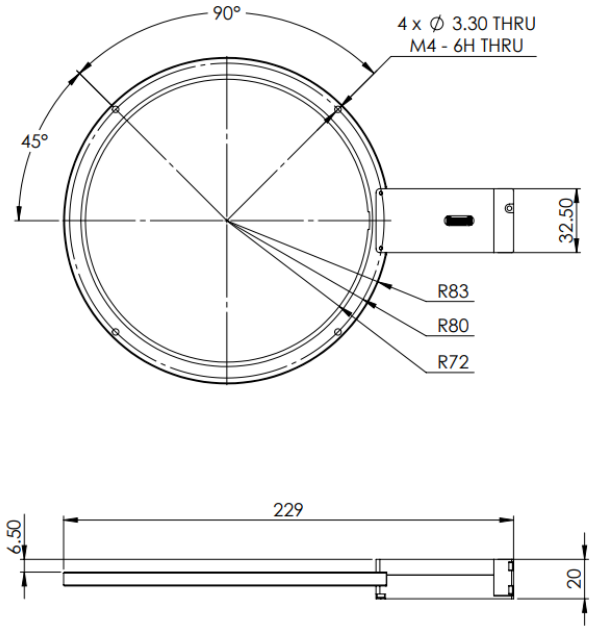

4. LuxiRing Maxi Ø420 mm

2D Drawing

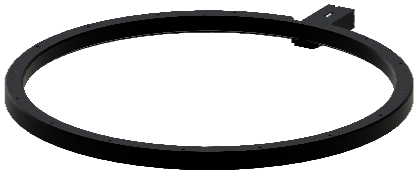

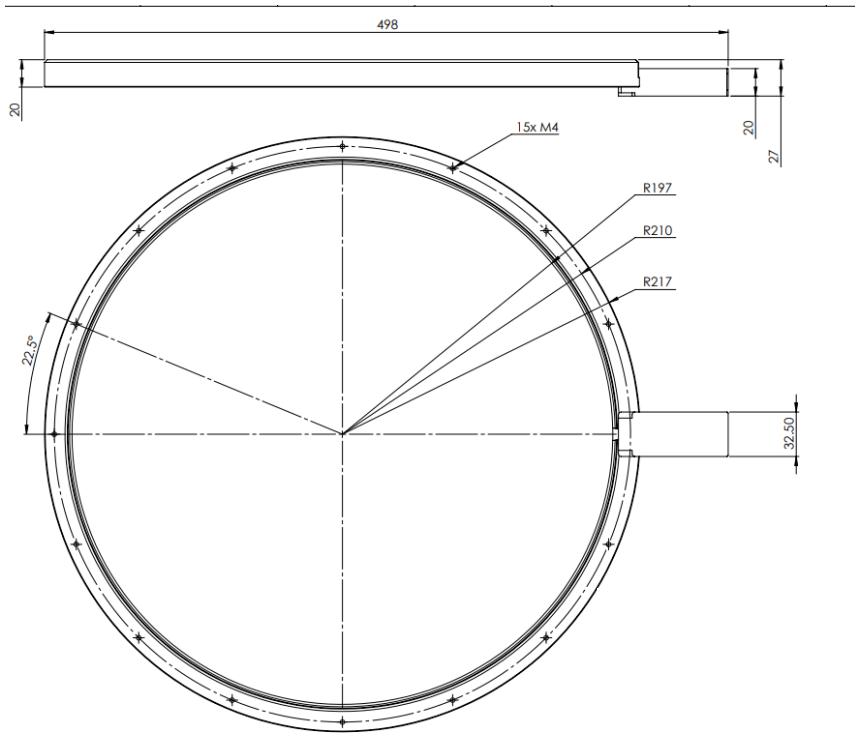

This document is property of L.E.S.S. SA and may not be copied without our prior written consent. All statements herein are believed to be reliable and accurate. However, no responsibility is assumed for any inaccuracies or omissions. L.E.S.S. SA reserves the right to make changes in the specifications at any time without prior notice.

Controller *(I0030-1000-01-A)*

2D Drawing

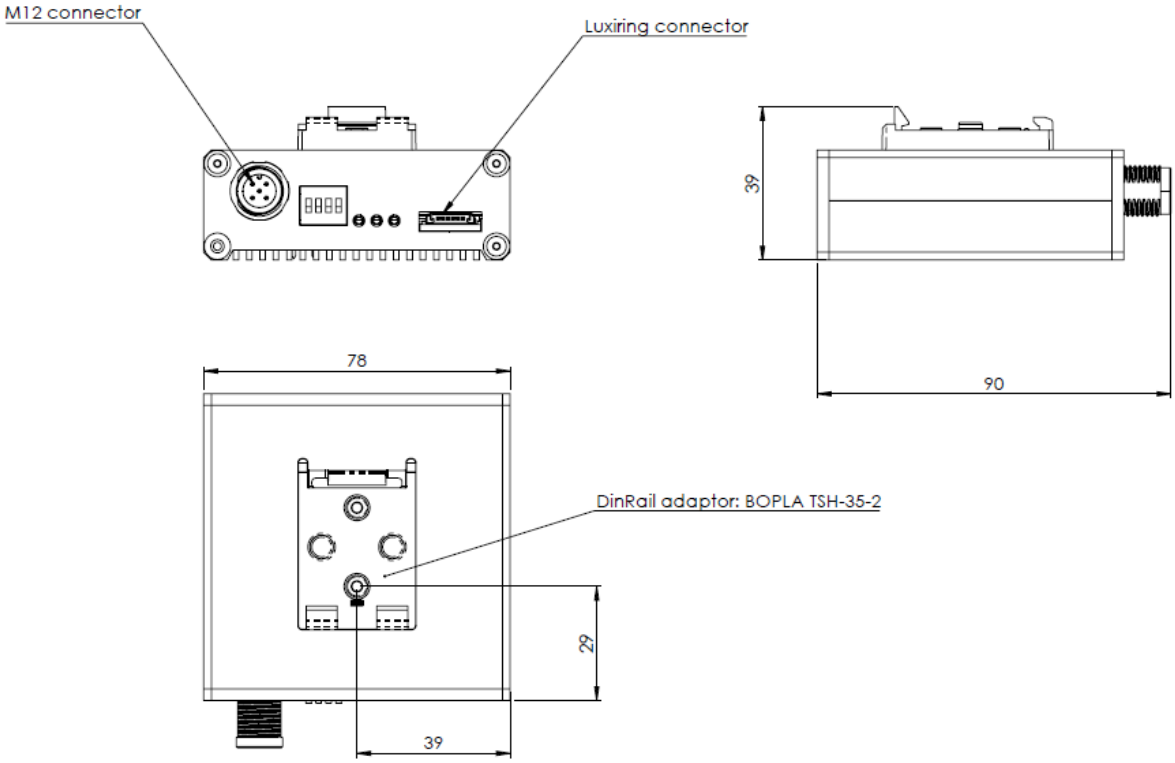

Operating Modes

1. Continuous at nominal current

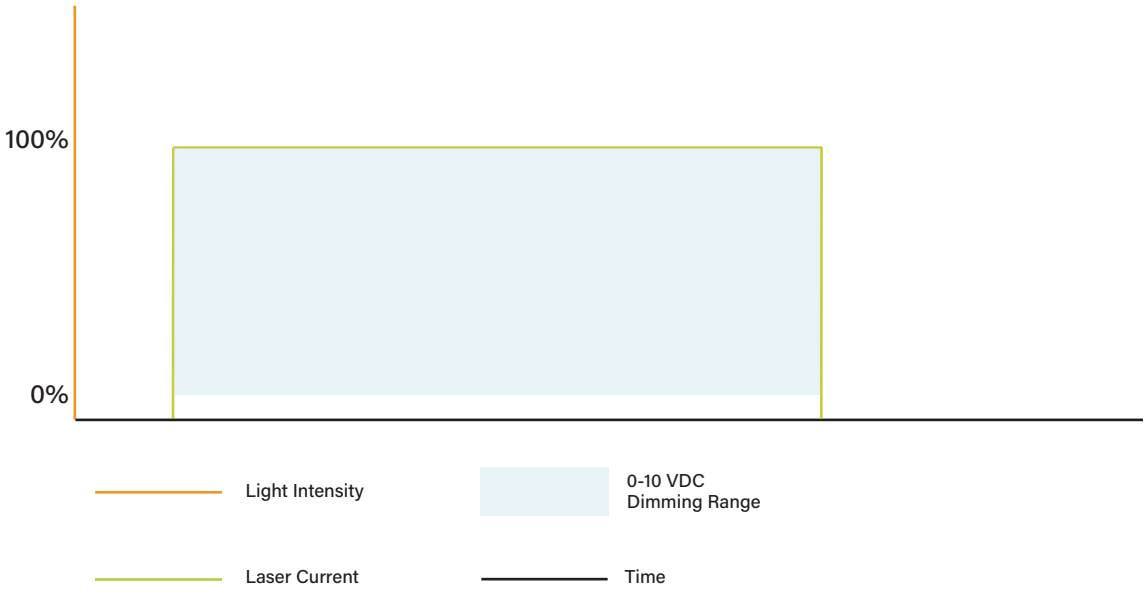

This document is property of L.E.S.S. SA and may not be copied without our prior written consent. All statements herein are believed to be reliable and accurate. However, no responsibility is assumed for any inaccuracies or omissions. L.E.S.S. SA reserves the right to make changes in the specifications at any time without prior notice.

Operating Modes

2. Rising Edge + Overdrive *

3. Following pulse + Overdrive *

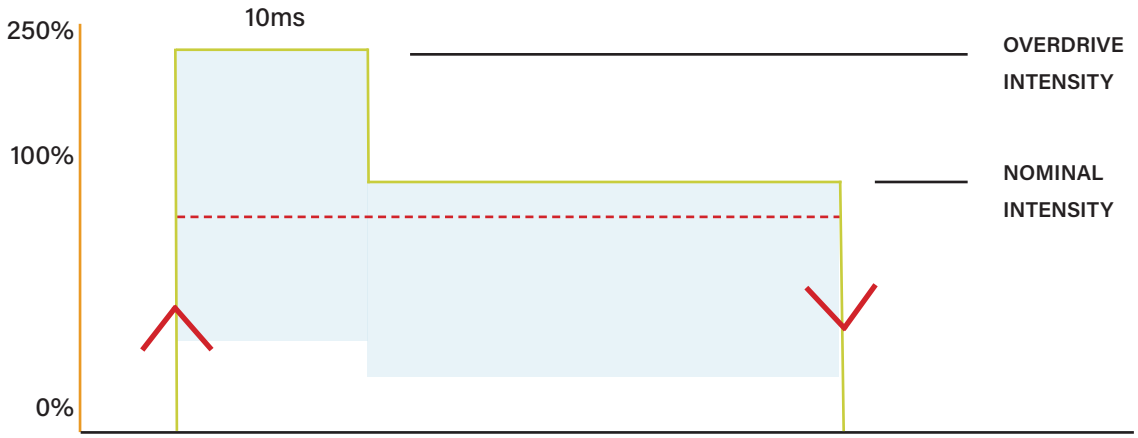

4. Voltage with Dipswitch 4 ON

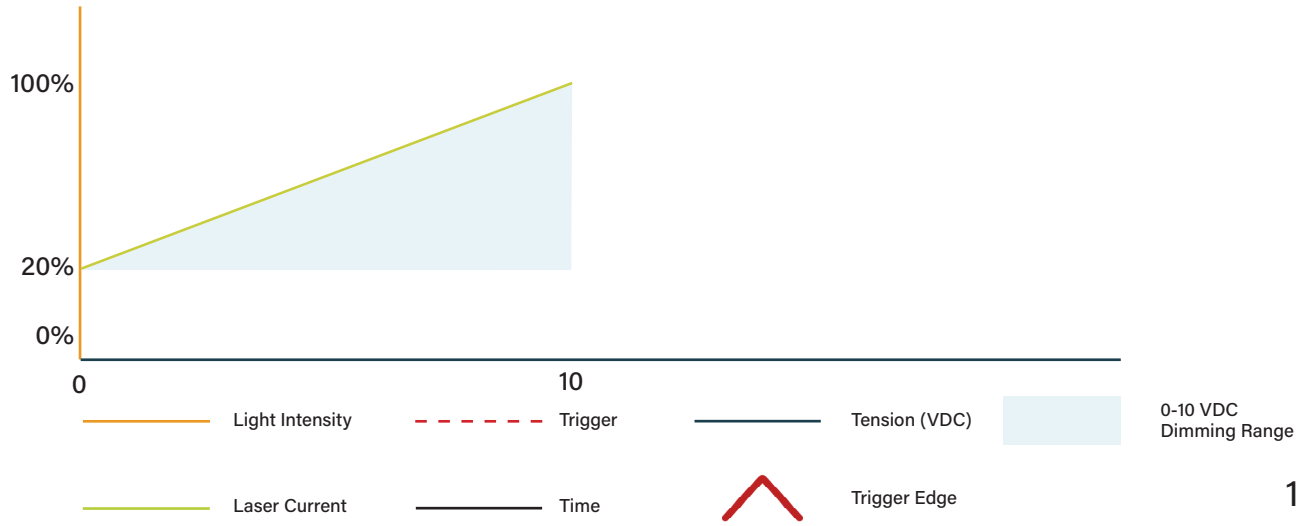

This document is property of L.E.S.S. SA and may not be copied without our prior written consent. All statements herein are believed to be reliable and accurate. However, no responsibility is assumed for any inaccuracies or omissions. L.E.S.S. SA reserves the right to make changes in the specifications at any time without prior notice.

Cabling

Controller's input: 5 wires terminal-to M12 5-pin-power supply and external trigger

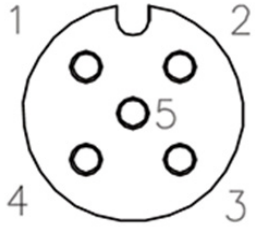

Ref : AC-M12-1.5

1	BN		24 VDC
2	WH		Analog Dimming 0-10 VDC*
3	BU		GND
4	BK		Trigger in 12-26 VDC
5	GY		n.u.

Light source connector: I/O connector:
TE Connectivity / ERNI iBridge Ultra.

**Analog dimming range: 0–10 VDC.*

At 0 VDC, light intensity is 20%; at 10 VDC, light output is 100%.

Ordering Informations

Products reference.

LuxiRing	Angle	Diameter	M12 Cable	Supply Cable	Controller
LR	Low Angle High Angle	XX ⌀ XX ⌀	AC-M12-1.5	AC-CBL-1M AC-CBL-2M	CTRL-LR-V2

RISK CLASS 0
EN 62471: 2006

EYE-SAFE
CLASS 1 LASER PRODUCT
ICE 60825-1 2014-05